MGS
MILANO

96.250.xx.0

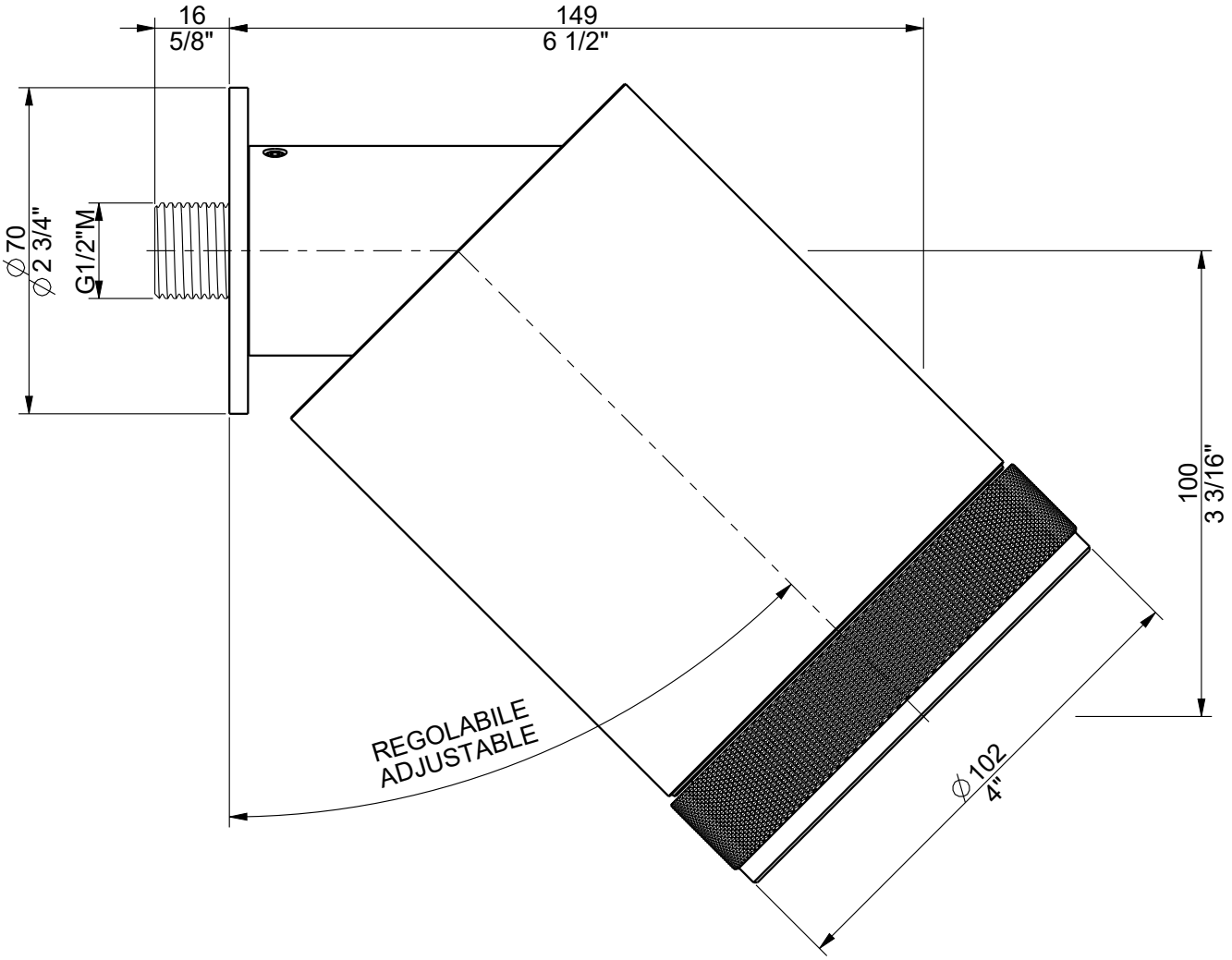

MGS
MILANO

96.250.xx.0

RAIN

A soft rain caressing the body and converting the shower into a moment of real pleasure.

AIRSTREAM

A soft mix of air and water, for a full and enveloping feeling.

MASSAGE

A strong jet with an intermittent massaging action, conquering with its energizing action.

RAIN

AIRSTREAM

MASSAGE

MGS
MILANO

96.250.xx.0