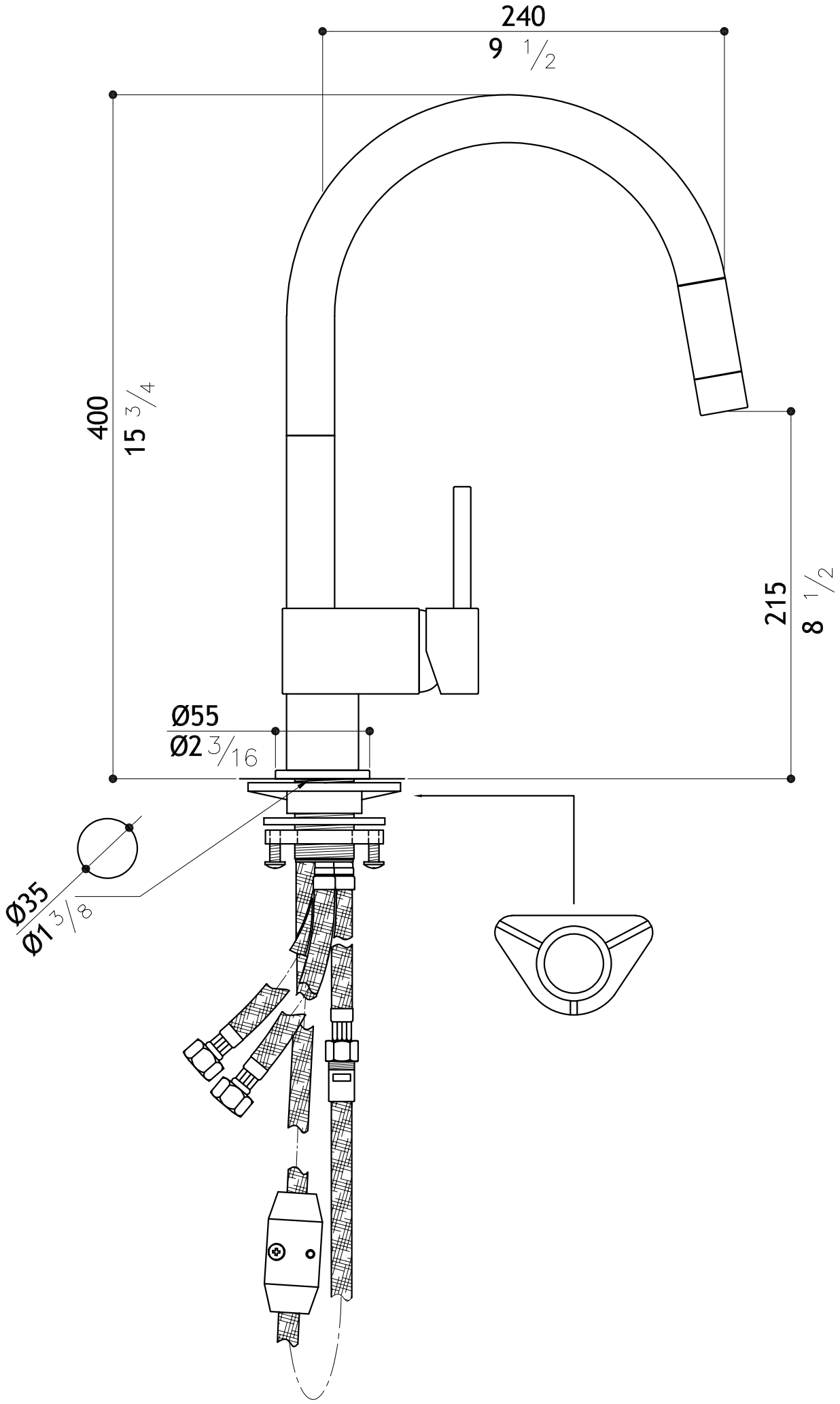

MGS
MILANO

u.s.w. 95.530.xx.1